Metal + Kaplama Tipi Metal + Surface Finishing		Gövde Malzemesi Clamp Body Material	
0	Kaplamasız / Uncoated	A	Alüminyum / Aluminum
1	Fosfat / Phosphated / Fe/Znph	N	Polyamid / Polyamide
3	Galvaniz / Galvanized / Fe/Zn 8C Cr3-B	T	TPE
4	CrNi 304 AISI 304	P	Polipropilen / Polypropylene
6	CrNi 316 AISI 316		
9	Çinko Nikel / Zinc Nickel Fe/ZnNi		

Farklı malzeme talepleriniz için lütfen LMC Makina'ya danışınız.

For different material request please consult LMC Makina.

Gövde + Cıvata + Üstlük
Clamp Body + Bolt + Cover Plate 3

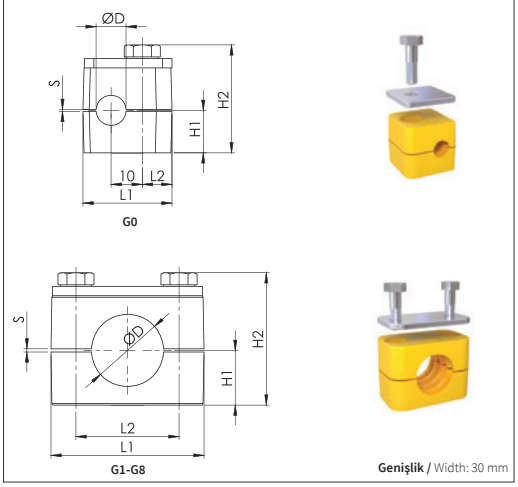

Çift Plakalı Kelepçe
Double Plated Clamp 4

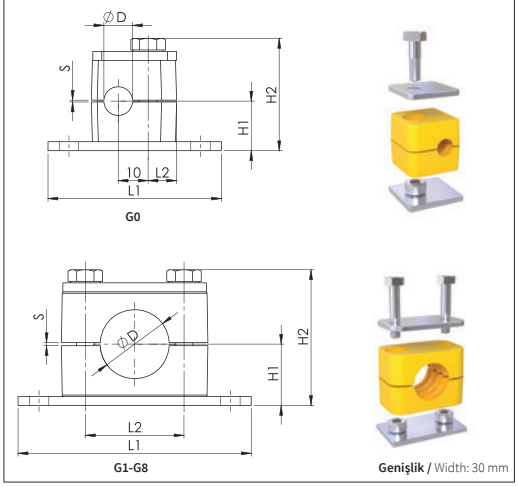

C	D	6	8	M	1	3	P	1	S	G	1	X	X	X	.	X
						Metal + Kaplama Tipi / Metal + Surface Finishing	Gövde Malzemesi / Clamp Body Material		Gövde Renk / Clamp Body Colour	Grup / Group		Ölçü / Size				

C	M	4	0	M	1	3	P	1	S	G	1	X	X	X	.	X
						Metal + Kaplama Tipi / Metal + Surface Finishing	Gövde Malzemesi / Clamp Body Material		Gövde Renk / Clamp Body Colour	Grup / Group		Ölçü / Size				

Grup Group	Dış Çap (ØD) O.D. of Pipe / Tube/Hose mm	Anma Çapı (R) Boru Diş Nominal Bore Pipe inch	Dış Çap (ØD) O.D. of Pipe / Tube/Hose inch	Ölçü Tablosu Dimension Table L1	L2	H1	H2	S min.	Sipariş Kodu Order Code
G0	6			28	9.5	13.5	34	0.4	CD68M13P1SG0006.0
	6.4		1/4						CD68M13P1SG0006.4
	8		5/16						CD68M13P1SG0008.0
	9.5		3/8						CD68M13P1SG0009.5
	10	R 1/8							CD68M13P1SG0010.0
	12								CD68M13P1SG0012.0
G1	6			37	20	13.5	34	0.4	CD68M13P1SG1006.0
	6.4		1/4						CD68M13P1SG1006.4
	8		5/16						CD68M13P1SG1008.0
	9.5		3/8						CD68M13P1SG1009.5
	10	R 1/8							CD68M13P1SG1010.0
	12								CD68M13P1SG1012.0
G2	12.7		1/2	42	26	16.5	40	0.6	CD68M13P1SG2012.7
	13.5	R 1/4							CD68M13P1SG2013.5
	14								CD68M13P1SG2014.0
	15								CD68M13P1SG2015.0
	16		5/8						CD68M13P1SG2016.0
	17.2	R 3/8							CD68M13P1SG2017.2
	18								CD68M13P1SG2018.0
G3	19		3/4	50	33	18	43	0.6	CD68M13P1SG3019.0
	20								CD68M13P1SG3020.0
	21.3	R 1/2							CD68M13P1SG3021.3
	22		7/8						CD68M13P1SG3022.0
	23								CD68M13P1SG3023.0
	25								CD68M13P1SG3025.0
	25.4		1						CD68M13P1SG3025.4
G4	26.9	R 3/4		59	40	21	49	0.6	CD68M13P1SG4026.9
	28								CD68M13P1SG4028.0
	30								CD68M13P1SG4030.0
G5	32		1 1/4	71	52	29	65	0.8	CD68M13P1SG5032.0
	33.7	R 1							CD68M13P1SG5033.7
	35								CD68M13P1SG5035.0
	38		1 1/2						CD68M13P1SG5038.0
	40								CD68M13P1SG5040.0
	42	R 1 1/4							CD68M13P1SG5042.0
G6	44.5		1 3/4	86	66	33	73	0.8	CD68M13P1SG6044.5
	48.3	R 1 1/2							CD68M13P1SG6048.3
	50.8		2						CD68M13P1SG6050.8
G7	57.2		2 1/4	121	94	46.5	102	0.8	CD68M13P1SG7057.2
	60.3	R 2							CD68M13P1SG7060.3
	63.5		2 1/2						CD68M13P1SG7063.5
	70		2 3/4						CD68M13P1SG7070.0
	73								CD68M13P1SG7073.0
	76.1	R 2 1/2	3						CD68M13P1SG7076.1
G8	88.9	R 3	3 1/2	147	120	59	127	0.8	CD68M13P1SG8088.9
	101.6		4						CD68M13P1SG8101.6

Grup Group	Dış Çap (ØD) O.D. of Pipe / Tube/Hose mm	Anma Çapı (R) Boru Diş Nominal Bore Pipe inch	Dış Çap (ØD) O.D. of Pipe / Tube/Hose inch	Ölçü Tablosu Dimension Table L1	L2	H1	H2	S min.	Sipariş Kodu Order Code
G0	6			31.5	9.5	16.5	37	0.4	CM40M13P1SG0006.0
	6.4		1/4						CM40M13P1SG0006.4
	8		5/16						CM40M13P1SG0008.0
	9.5		3/8						CM40M13P1SG0009.5
	10	R 1/8							CM40M13P1SG0010.0
	12								CM40M13P1SG0012.0
G1	6			36	20	16.5	37	0.4	CM40M13P1SG1006.0
	6.4		1/4						CM40M13P1SG1006.4
	8		5/16						CM40M13P1SG1008.0
	9.5		3/8						CM40M13P1SG1009.5
	10	R 1/8							CM40M13P1SG1010.0
	12								CM40M13P1SG1012.0
G2	12.7		1/2	42	26	19.5	43	0.6	CM40M13P1SG2012.7
	13.5	R 1/4							CM40M13P1SG2013.5
	14								CM40M13P1SG2014.0
	15								CM40M13P1SG2015.0
	16		5/8						CM40M13P1SG2016.0
	17.2	R 3/8							CM40M13P1SG2017.2
	18								CM40M13P1SG2018.0
G3	19		3/4	50	33	21	46	0.6	CM40M13P1SG3019.0
	20								CM40M13P1SG3020.0
	21.3	R 1/2							CM40M13P1SG3021.3
	22		7/8						CM40M13P1SG3022.0
	23								CM40M13P1SG3023.0
	25								CM40M13P1SG3025.0
	25.4		1						CM40M13P1SG3025.4
G4	26.9	R 3/4		60	40	24	52	0.6	CM40M13P1SG4026.9
	28								CM40M13P1SG4028.0
	30								CM40M13P1SG4030.0
G5	32		1 1/4	71	52	32	68	0.8	CM40M13P1SG5032.0
	33.7	R 1							CM40M13P1SG5033.7
	35								CM40M13P1SG5035.0
	38		1 1/2						CM40M13P1SG5038.0
	40								CM40M13P1SG5040.0
	42	R 1 1/4							CM40M13P1SG5042.0
G6	44.5		1 3/4	86	66	36	76	0.8	CM40M13P1SG6044.5
	48.3	R 1 1/2							CM40M13P1SG6048.3
	50.8		2						CM40M13P1SG6050.8
G7	57.2		2 1/4	122	94	51.5	107	0.8	CM40M13P1SG7057.2
	60.3	R 2							CM40M13P1SG7060.3
	63.5		2 1/2						CM40M13P1SG7063.5
	70		2 3/4						CM40M13P1SG7070.0
	73								CM40M13P1SG7073.0
	76.1	R 2 1/2	3						CM40M13P1SG7076.1
G8	88.9	R 3	3 1/2	148	120	64	132	0.8	CM40M13P1SG8088.9
	101.6		4						CM40M13P1SG8101.6