KURTMAN

Bulkhead Elbow / UNF/UN

KSD/UNF KONTRA SOMUNLU DİRSEK

Gövde sipariş kodu

Order code without nut and cutting ring
XKSD….(X166…)

Komple sipariş kodu

Order code with nut and cutting ring
KSD….(166…)

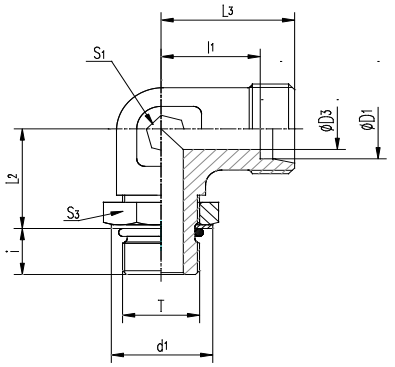

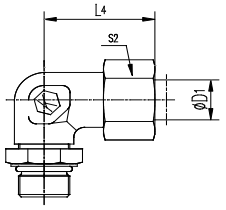

Series	Tube ØD1 / Boru Çapı	T	L4	L3	l1	L2	i	d1	S1	S2	S3	O-RING	ITEM CODE / PARÇA KODU	ITEM NAME / PARÇA ADI	PN (bar)
L NB	6	7/16"-20 UNF	27	19	12	19	10	16.5	12	14	14	OR 9.17x1.83	**166240604**	**KSD6NBUNF4**	315
	8	7/16"-20 UNF	29	21	14	19	10	18.3	12	17	14	OR 9.17x1.83	**166240804**	**KSD8NBUNF4**	315
	10	9/16"-18 UNF	30	22	15	24	10	20.2	14	19	17	OR 11.89x1.98	**166241004**	**KSD10NBUNF6**	315
	12	3/4"-16 UNF	32	24	17	25	13	25.7	17	22	22	OR 16.36x2.21	**166241206**	**KSD12NBUNF8**	315
	15	7/8"-14 UNF	36	28	21	28	15	29.3	19	27	27	OR 19.18x2.46	**166241508**	**KSD15NBUNF10**	315
	18	7/8"-14 UNF	40	31	23.5	32	15	29.3	24	32	27	OR 19.18x2.46	**166241808**	**KSD18NBUNF10**	315
	22	1 1/16"-12 UN	44	35	27.5	35	17	36.7	27	36	32	OR 23.47x2.95	**166242212**	**KSD22NBUN12**	160
	28	1 5/16"-12 UN	47	38	30.5	42	17	44	36	41	41	OR 29.74x2.95	**166242816**	**KSD28NBUN16**	160
	35	1 5/8"-12 UN	56	45	34.5	46	17	55	41	50	50	OR 37.47x3	**166243520**	**KSD35NBUN20**	160
	42	1 7/8"-12 UN	63	51	40	47	17	55	50	60	55	OR 43.69x3	**166244224**	**KSD42NBUN24**	160
S YB	6	7/16"-20 UNF	31	23	16	20	12	16.5	12	17	14	OR 9.17x1.83	**166340604**	**KSD6YBUNF4**	400
	8	9/16"-18 UNF	32	24	17	25	12	18.3	14	19	17	OR 11.89x1.98	**166340804**	**KSD8YBUNF6**	400
	10	9/16"-18 UNF	34	25	17.5	26	12	20.2	17	22	17	OR 11.89x1.98	**166341006**	**KSD10YBUNF6**	400
	12	3/4"-16 UNF	38	29	21.5	30	14	25.7	19	24	22	OR 16.36x2.21	**166341206**	**KSD12YBUNF8**	400
	14	7/8"-14 UNF	40	30	22	34	16	29	19	27	27	OR 19.18x2.46	**166341408**	**KSD14YBUNF10**	400
	16	7/8"-14 UNF	43	33	24.5	34	16	29	24	30	27	OR 19.18x2.46	**166341608**	**KSD16YBUNF10**	400
	20	1 1/16"-12 UN	48	37	26.5	37	19	37	27	36	32	OR 23.47x2.95	**166342012**	**KSD20YBUN12**	400
	25	1 5/16"-12 UN	54	42	30	50	19	44	36	46	41	OR 29.74x2.95	**166342516**	**KSD25YBUN16**	400
	30	1 5/8"-12 UN	62	49	35.5	50	19	55	41	50	50	OR 37.47x3	**166343020**	**KSD30YBUN20**	250
	38	1 7/8"-12 UN	72	57	41	51	19	55	50	60	55	OR 43.69x3	**166343824**	**KSD38YBUN24**	250

L= light series NB= Normal basınç
S= heavy series YB= Yüksek basınç

$\frac{\text{PN (bar)}}{10}$ = PN (MPa)

Çinko Kaplama / Zinc plated=Cr(VI)-free

K415